Hilumz
Court Lighting Solutions

NightShine Grand
HLAR08 - *Specification Sheet*

# High Performance 40K to 92K lumen system



## Modern Seagull-Curve Design

## Excellent Light Performance

## Immediate On-Off/0-10V Dimming

## Field Servicable

## 5050 Lumiled Chip Set

10 YEAR WARRANTY
for Tennis

C ETL US LISTED
Intertek

All of the latest LED technology combined to deliver the highest performance high tennis court lighter on the market. Lumiled 5050 LEDs are the standard in high performing LEDs. The chipset allows for a large and efficient optical package that optimizes light control and distribution. The system is offered with standard 20kV surge and a large body pure aluminum heat management system. The NightShine Grand will provide superior light play for decades to come.

- *Full service and full maintenance support*
- *Rugged and simple "one-person install" system*
- *Built & supported in the Alpharetta, GA*
- *Tier 1 performance*

Type IV Wide distribution standard for limited backlight and forward/ wide light throw.

Other optics Availailable

Breathing value for heat pressure release.

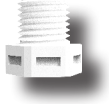

Court Lighting Solutions

NightShine Grand
HLAR08 - *Specification Sheet*

## Performance

| Product | Wattage | Lumens, 5000K | Voltage | CRI | Op Temp |
|---|---|---|---|---|---|
| AR08 | 400 | 58,000 | 100-277V, 270-480V | 74+ | -40°C +55°C |
| | 500 (465 measured) | 67,500 | | | |
| | 600 | 83,520 | | | |

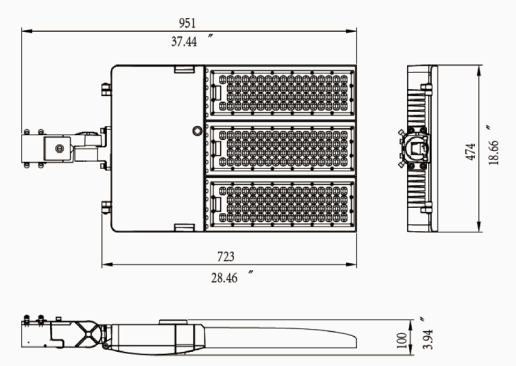


| | |
|---|---|
| Net Weight | 15.0kg/33.0lb |
| Gross Weight | 18.6kg/37.0lb |
| EPA | 0.6 |
| Dimensions | 37.4 * 18.6 * 3.9” |

## Optical Distribution

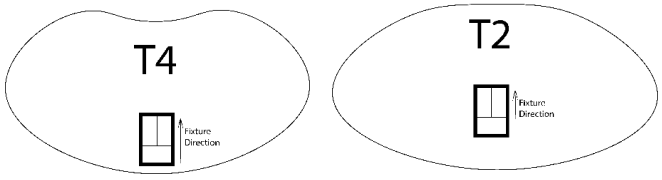


For roadway, not typically stocked

Photometric Services Available
Other Optics Available upon Request

## Ordering

EXAMPLE **AR08-500-1N-50K-T5-SF-N-10 :** *500 watt unit on a 120-277V line at 5000K, with T4 optics and slip fitter mount, 10 year warranty*

| SKU | Wattage | Voltage | CCT | Optics | Mounting | Shields |
|---|---|---|---|---|---|---|
| **AR08** | **400**<br>**500**<br>**600** | **1N** (120-277)<br>**2N** (277-480) | **50K** = 5000K | **T4**<br>**T2** | **SP** Pole Mount (square)<br>**RP** Pole Mount (round)<br>**TRU** Trunnion<br>**SF** Slip Fitter<br>**TRU** Trunnion | **BS** Back sheild<br>**OBS** Optic Backshield<br>**4S** Four side shield |

Square/Round Pole Mount

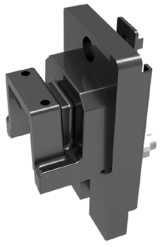

Slip Fitter



Trunnion




HiLumz USA

6835 Shiloh Rd E, C8
Alpharetta, GA 30004

sales@hilumzusa.com
678-867-9200
HiLumzSports.com